Wind.	Conductor	N°. of Turns	Rotat	Output pin	Winding layer	N°. layer	Sleeves Col.	Sleeves Ref. M.L.	Sleeves Total length mm.	Sleeves Free length mm.	Notes
N1a	2xLitz 90x0.10 Ref.3	0 8	+	2–3 *	8	1	Re Re	8 8	20 20	/ /	2 wires in 1 sleeve.
Insulation: 3 turns of polyester adhesive tape Ref.6											
N2 N3	Copper foil 0.50x0.20 Ref.4	0 1	+	A B C	1	1	/ /	/ /	/ /	/ /	
Insulation: 1 turns of polyester adhesive tape Ref.6 + 1 piece as showed in pictures											
N1b	2xLitz 90x0.10 Ref.3	0 8	+	* 4–5	8	1	Re	8	20	/	2 wires in 1 sleeve. Don't need correspondence
Insulation: 3 turns of polyester adhesive tape Ref.6											



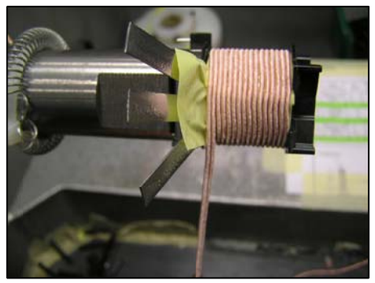

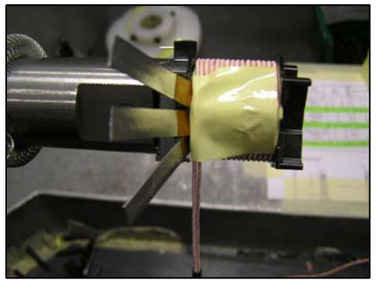

Insert piece of tape after the insulation of N2–N3. Wind N1b. Refold tape, block and connect the wires to pin

Copper foil preparation

tinned

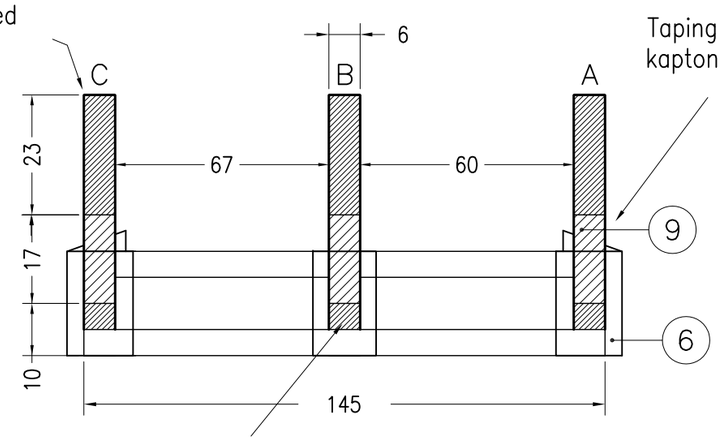

Solder the exits A–B–C ref. 5 on copper foil ref.4

Taping the exits with 3 turn of kapton ref.9

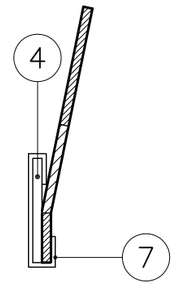

Insulate the foil with tape ref.7 and the welding with tape ref.6

finished part



Positioning coilformer – pin side

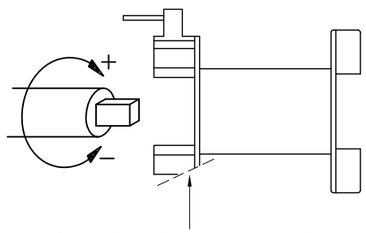

Smooth the inner part

Bottom view

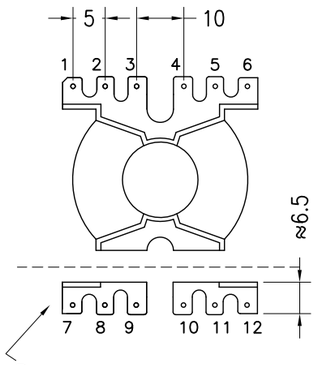

Remove

Electrical diagram

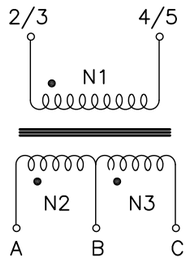

REV	APPR DATE	REF. MOD.	DESCRIPTION OF MODIFICATION	EDITING	CHECKING AND APPROVAL
02	21.07.15		Inserted label and pictures	C. Picciani	D. Di Giorgio
01	24.01.14		Release	C. Picciani	D. Di Giorgio

I.C.E. TRANSFORMERS

DESCRIPTION: **Trasformatore PQ35/35 600W LLC converter (130705)**

Mod. AQ 05.09

DOCUMENT TYPE	CODE	REVISION	RELEASE DATE	PAGE
P.F.	**8065.0703.001**	**02**	24.01.14	1of2

Assembling

Assemble the half-cores through 2 rounds of tape ref.14

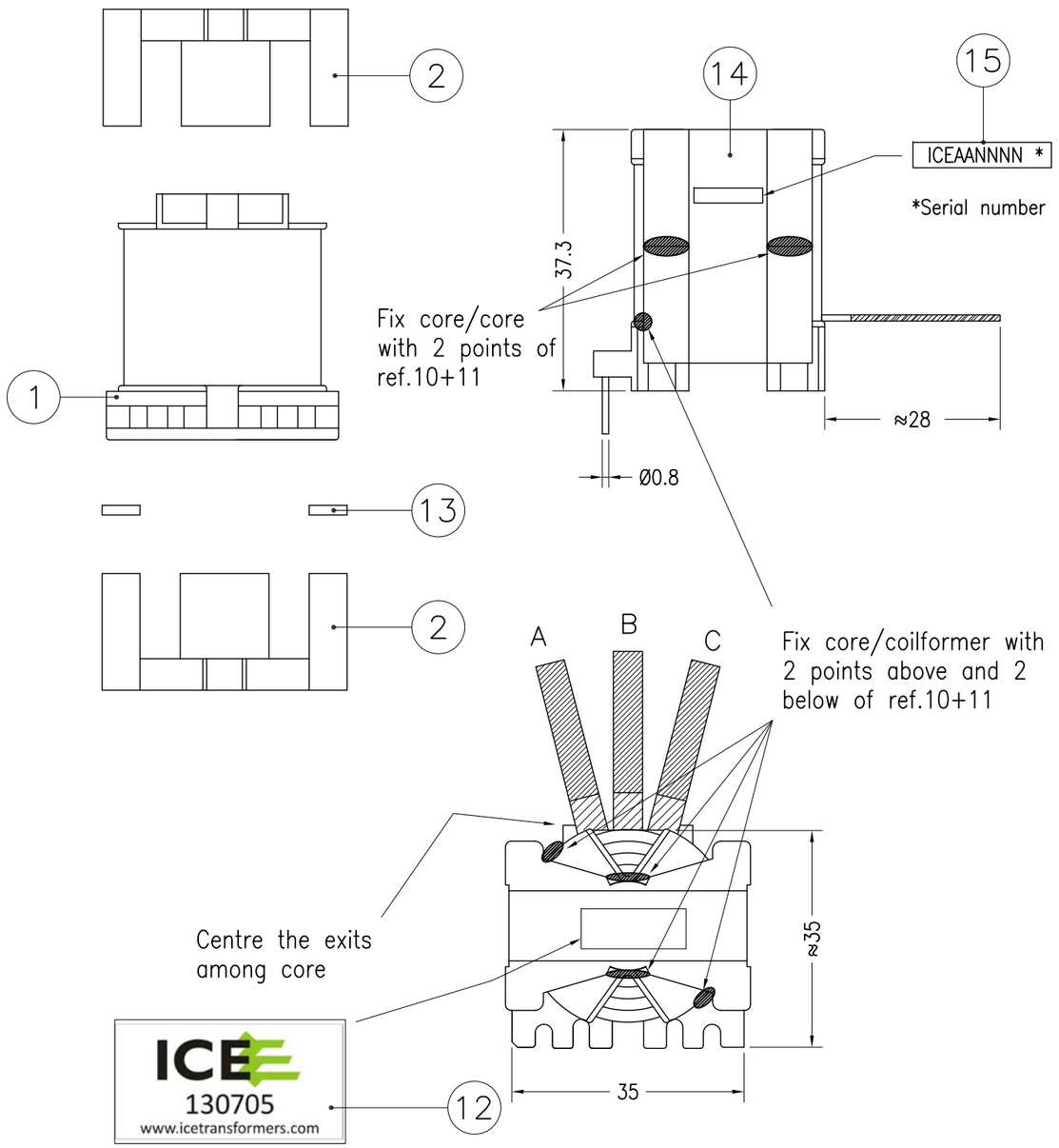

RoHS compliant

Dimensions in millimeters

Bill of materials

Ref. Nr.	Description
1	Coilformer PQ35/35 1hole 12pin (mat.T375J E59481 or equivalent)
2	Set core PQ35/35 gap0 (mat. PC95 AI7320±25% TDK – MANDATORY)
3	Litz wire 90x0.10mm G1 155°C (Polysol E125650 or equivalent)
4	Copper foil th.0.50mm H20mm
5	Copper foil th.0.50mm H6mm
6	Polyester adhesive tape th.0.08mm H22mm (1350 E17385 or equivalent)
7	Polyester adhesive tape th.0.08mm H37mm (1350 E17385 or equivalent)
8	Tube glass/silicone ø2mm 4KV (GVES2500 E311983 or equivalent)
9	Kapton adhesive tape th.0.05 H17mm (type911-32 E175868 or equivalent)
10	Epoxy resin (36T or equivalent)
11	Activator for epoxy resin (1N1005 or equivalent)
12	PVC label 24x12mm
13	Nomex th.0.13mm (or equivalent)
14	Polyester adhesive tape th.0.06mm H14.5mm (1350FY-1 E17385 or equivalent)
15	Polyester adhesive label 4.7x14mm (7816 – MH16411 or equivalent)

		Electrical test	
N°.	Test	Conditions	Limits
1	Inductance	2+3-4+5 @ 10kHz – 100mV	from 175.5 to 214.5 µH
2	Turns ratio	between all windings @ 10kHz – 100mV	< 1 turn
3	Dielectric strength	2+3+4+5/A+B+C @ 2500V – 50Hz – 1 sec.	to pass the test
4	Leakeage inductance	2+3-4+5 with A+B+C in s.c. @ 10kHz – 100mV	< 2 µH

I.C.E. TRANSFORMERS

DESCRIPTION: **Trasformatore PQ35/35 600W LLC converter (130705)**

Mod. AQ 05.09

DOCUMENT TYPE	CODE	REVISION	RELEASE DATE	PAGE
P.F.	**8065.0703.001**	**02**	24.01.14	2of2